Experiment No. 3	
SIMPLIFICATION OF BOOLEAN FUNCTION	
Course Code: CPE 013	**Program:** BSCPE
Course Title: Logic Circuits and Design	**Date Performed:** January 8, 2026
Section: CPE22S2	**Date Submitted:** January 15, 2026
Members: Bulaong Ross Andrew	**Instructor:** Engr. Noel Jason Lusung
Florencio David	
Malabanan Nadine	
Que Josef Leroy	
Zapanta Russell	

1. Objective:

This activity aims to demonstrate the ability to simplify Boolean Expressions using Boolean Algebra Laws and theorems and discuss the importance of simplifying circuits.

2. Intended Learning Outcomes (ILOs):

The students should be able to:
2.1 Apply the Boolean expression simplification process using theorems, laws and Identity.
2.2. Reflect on the importance of simplifying Boolean function.

3. Discussion

The Boolean Algebra honors a fascinating English mathematician named George Boole (1815-1864). He developed Boolean algebra in 1847 and used it to solve problems in mathematical logic. Claude Shannon first applied the Boolean algebra to the design of switching circuits in 1939.

When a variable is used in an algebraic expression, it is generally assumed that the variable may take any numerical value. For instance, in the expression A+B=C, we assume that A,B and C may range through the entire field of real numbers. The variable used in Boolean equations have a unique characteristics, because, they may be represented of two possible value. These two values may represented by 0 and 1. If an equation describing logical circuitry has several variables, it is still understood that each of the variables can assume only the values 0 and 1.

4. Resources:

Materials:

- Personal Computer
- Internet connection

Simulation Tools:

- TinkerCAD
- Logicly

5. Procedure:

1. Study the given diagram in Figure 3.1 and find out the number of ICs required to construct the given diagram. Fill-out the Table 3.1.

Boolean Expression:

$$F = \overline{A} + AB + A\overline{C} + A\overline{B}\,\overline{C}$$

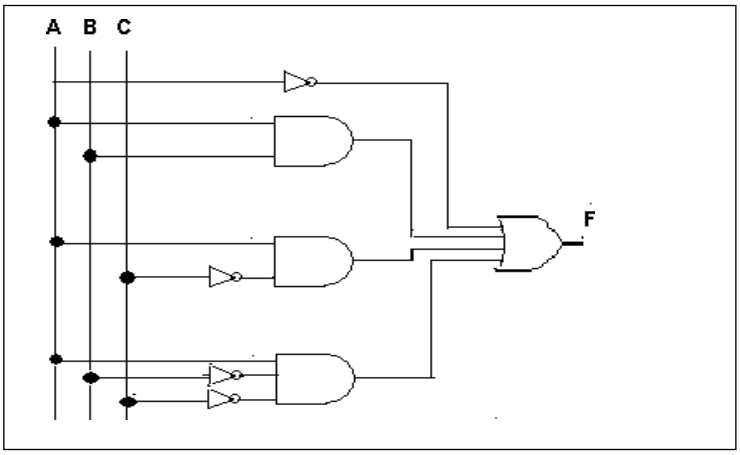

Figure 3.1 Logic Diagram

2. Construct the circuit as shown in Figure 3.1 in Logicly. Connect the INPUTS (A, B and C) to the data switches and the OUTPUT (F) to the LED as indicator.
3. Apply the different combinations to the data switches and observe the corresponding output in every combination. Record the answers in Table 3.2
4. Construct and simulate the circuit function again in Logic.ly and TinkerCAD. Count the number of ICs to be used to construct the circuit. Fill-out Table 3.3 and write the simplified Boolean expression.
5. Test the circuit function by applying the different combinations to the input lines and observe the corresponding output for every combination. Record the results in Table 3.3
6. When the experiment is completed, turn off the power and remove all the experimental components.

6. Data and Results:

Logic Gate	Quantity	IC Type	Quantity
NOT Gate	4	7404	1
AND Gate	3	7408	1
OR Gate	1	7432	1

Table 3.1 Quantity of Logic Gates and ICs

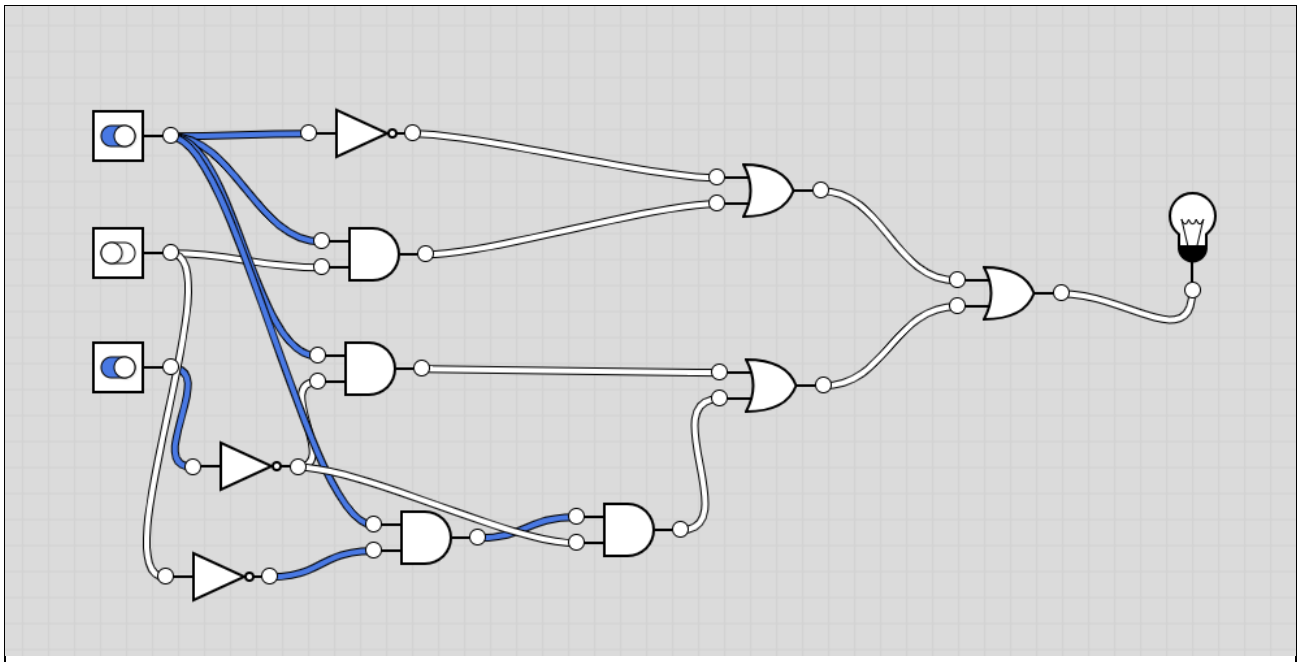

Figure 4.1: Logic Diagram of Figure 3.1

INPUTS			OUTPUT F
A	B	C	1
0	0	0	1
0	0	1	1
0	1	0	1
0	1	1	1
1	0	0	1
1	0	1	0
1	1	0	1
1	1	1	1

Table 3.2 Data and Result

Type of IC	Number	Type of IC	Number
AND	7408		
OR	7432		
NOT	7404		

Table 3.3 IC Type and IC series number

Simplified Boolean Expression: *B + 'C*

a.) Simplify the Boolean expression indicated in Step 1. Write the simplified Boolean expression and draw the logic circuit equivalent:

Simplified Circuit Diagram

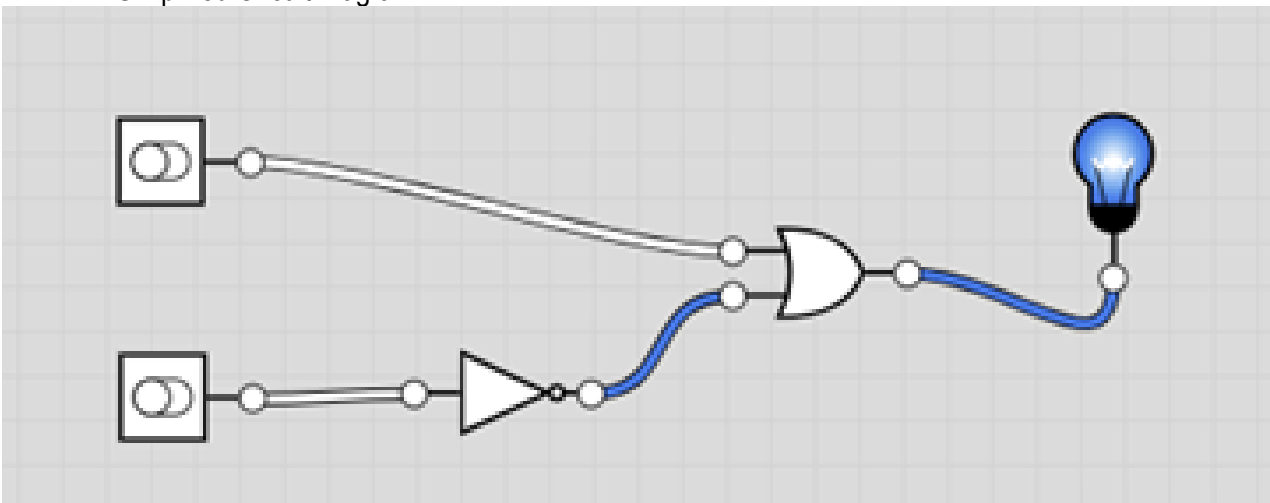

Figure 4.2: Simplified Version of 3.2

Table 3.4 Truth Table of the simplified expression

B	C	‘C	Output
0	0	1	1
0	1	0	0
1	0	1	1
1	1	0	1

7. Final Output

Screenshot or print screen of TinkerCAD application different output simulations (5 points deductions for only one output in every required circuit). Also, upload a video of the simulated circuit naming or talking about the shown input combinations. Failure to comply to each instruction will resulted to 5 points deductions. Please include the recorded simulation video in this section and write at least one sentence definition or label for each figure or image.

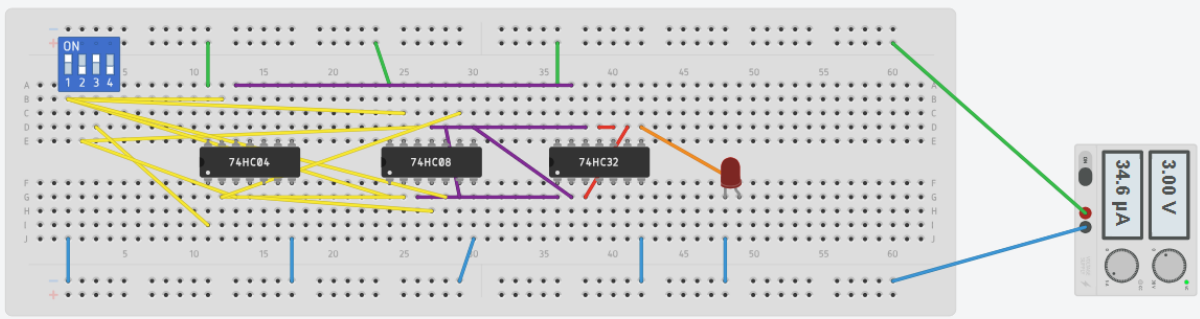

COMPLEX VER.

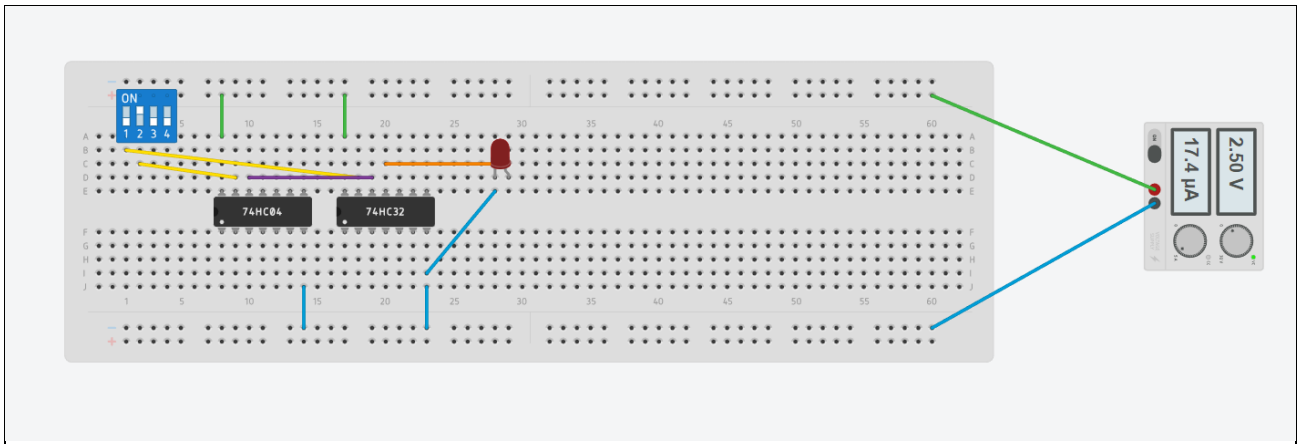

SIMPLIFIED VER.

GOOGLE DRIVE LINK:
https://drive.google.com/file/d/15TlJaS52t9iQkVdGxbfWv_5Xgsso2lRp/view?usp=sharing

TINKERCAD LINK: https://www.tinkercad.com/things/fjU4QQZqely-simplificationofbooleanexpressiongr6

8. Conclusion:

Write a one paragraph (at least 10 sentences) Conclusion for this activity.

NOTE: We had our own conclusions, with at least 10 sentences when combined

BULAONG

After the experiment, I've properly understood the importance of simplifying Boolean expressions to get simpler circuits. As I made the TinkerCAD simulation, I've realized how unnecessarily difficult and inefficient it is to recreate the main Boolean expression without simplification. I've spent quite some time adjusting and making sure all the gates were correct. Some of these gates can be removed (via Law of Complementarity or Law of Distribution), making the circuit easier to read. Overall, it is within struggle that we find peace and importance of studying simplification techniques, which solidifies their importance in studying logic circuits.

FLORENCIO

In this activity, I learned many important things about Boolean algebra, especially how to simplify the Boolean expressions and properly use ICs in logic circuits. The experiment was challenging and required deep understanding, but it helped me to see the importance of simplification in making circuits more efficient.

MALABANAN

At first, I thought this experiment would be easy, but when we started building the circuit on the breadboard, I realized it really takes focus and patience. It also showed me how important simplifying the Boolean expression is because it makes the circuit easier to set up and understand.

QUE

For the actual breadboarding, we have tried doing the schematics without using switches. We have executed the manual wiring by allotting a line for a,b, and c and connected them to the right input and outputs of the IC's.

ZAPANTA

This experiment might look simple, but it is actually quite difficult when you start working on the breadboard. If you understand the basic concept of the IC, then you can definitely do this experiment.

9. Assessment (Rubric for Laboratory Performance):

Laboratory Performance Rubric (2)

Criteria	Ratings			Pts
Manipulative Skills	**3 pts** **Proficient** Student always demonstrate needed skills.	**2 pts** **Acceptable** Student occasionally demonstrate needed skills.	**1 pts** **Beginner** Student do not demonstrate needed skills.	3 pts
Experimental Set - up	**3 pts** **Proficient** Student are able to set-up the material with minimum supervision.	**2 pts** **Acceptable** Student are able to set-up the materials with supervision.	**1 pts** **Beginner** Student are unable to set-up the materials.	3 pts
Process Skills	**3 pts** **Proficient** Student always demonstrate targeted process skills.	**2 pts** **Acceptable** Student occasionally demonstrate targeted process skills.	**1 pts** **Beginner** Student do not demonstrate targeted process skills.	3 pts
Application of Technical Writing Skills	**3 pts** **Proficient** Correct spelling, grammar, and sentence construction when writing the Discussion, Observation, and Conclusion are applied in the laboratory report.	**2 pts** **Acceptable** Some minor incorrect spelling, wrong grammar, and wrong sentence construction when writing the Discussion, Observation, and Conclusion are applied in the laboratory report.	**1 pts** **Beginner** Many incorrect spelling, wrong grammar, and wrong sentence construction when writing the Discussion, Observation, and Conclusion are applied in the laboratory report.	3 pts
Time Management / Conduct of Experiment	**3 pts** **Proficient** Student finish ahead of time with complete data and time to revise data.	**2 pts** **Acceptable** Student finish on time with incomplete data.	**1 pts** **Beginner** Student do not finish on time with incomplete data.	3 pts
Complete Requirements of Laboratory Report	**3 pts** **Proficient** Student submitted a complete requirements set by the teacher.	**2 pts** **Acceptable** Student submitted an almost complete Laboratory Report according to requirements set by the teacher.	**1 pts** **Beginner** Student submitted a lot of missing requirements in the Laboratory Report according to requirements set by the teacher.	3 pts
Follow the Correct Format of Laboratory Report	**3 pts** **Proficient** Student submitted a correct format of Laboratory Report according to requirements set by the teacher.	**2 pts** **Acceptable** Student submitted an almost correct format of Laboratory Report according to requirements set by the teacher.	**1 pts** **Beginner** Student did not follow at all the format of Laboratory Report according to requirements set by the teacher.	3 pts
Ability to do independent work	**3 pts** **Proficient** Student do not need to be supervised by the teacher.	**2 pts** **Acceptable** Student require occasional supervision by the teacher.	**1 pts** **Beginner** Student require supervision by the teacher.	3 pts
				Total Points: 24